TODO: Verify pin numbers

TODO: check footprints sizes

TODO: check netlist

TODO: add stepper motor symbol after completing the pcb layout

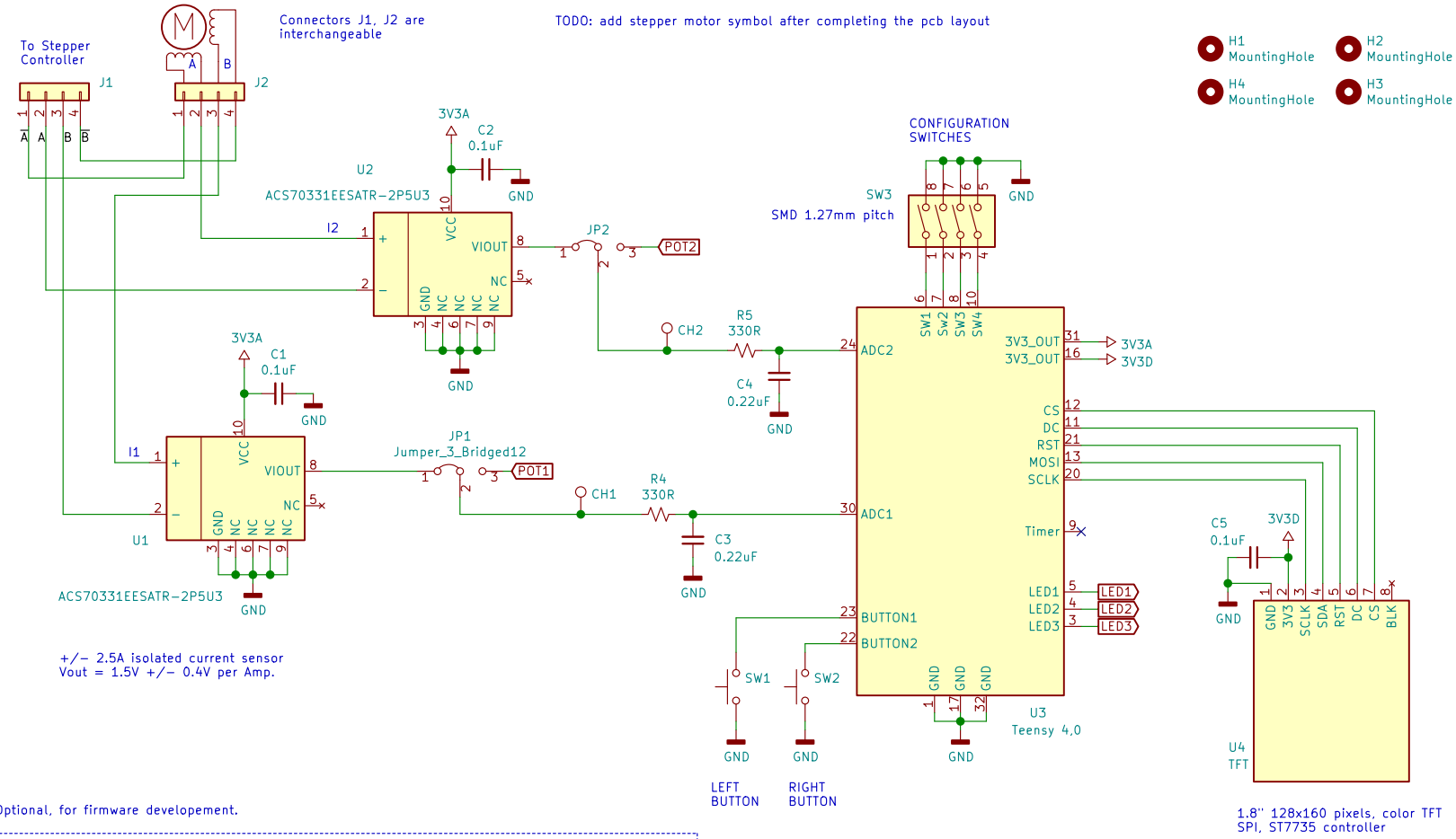

+/- 2.5A isolated current sensor
Vout = 1.5V +/- 0.4V per Amp.

Optional, for firmware developement.

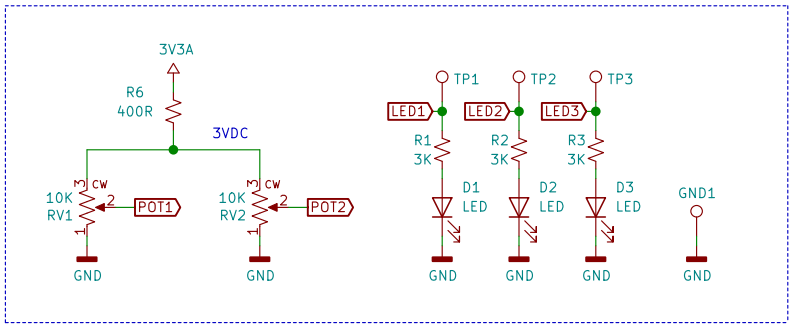

Resistors, capacitors and LEDS are 0603 SMD packages.